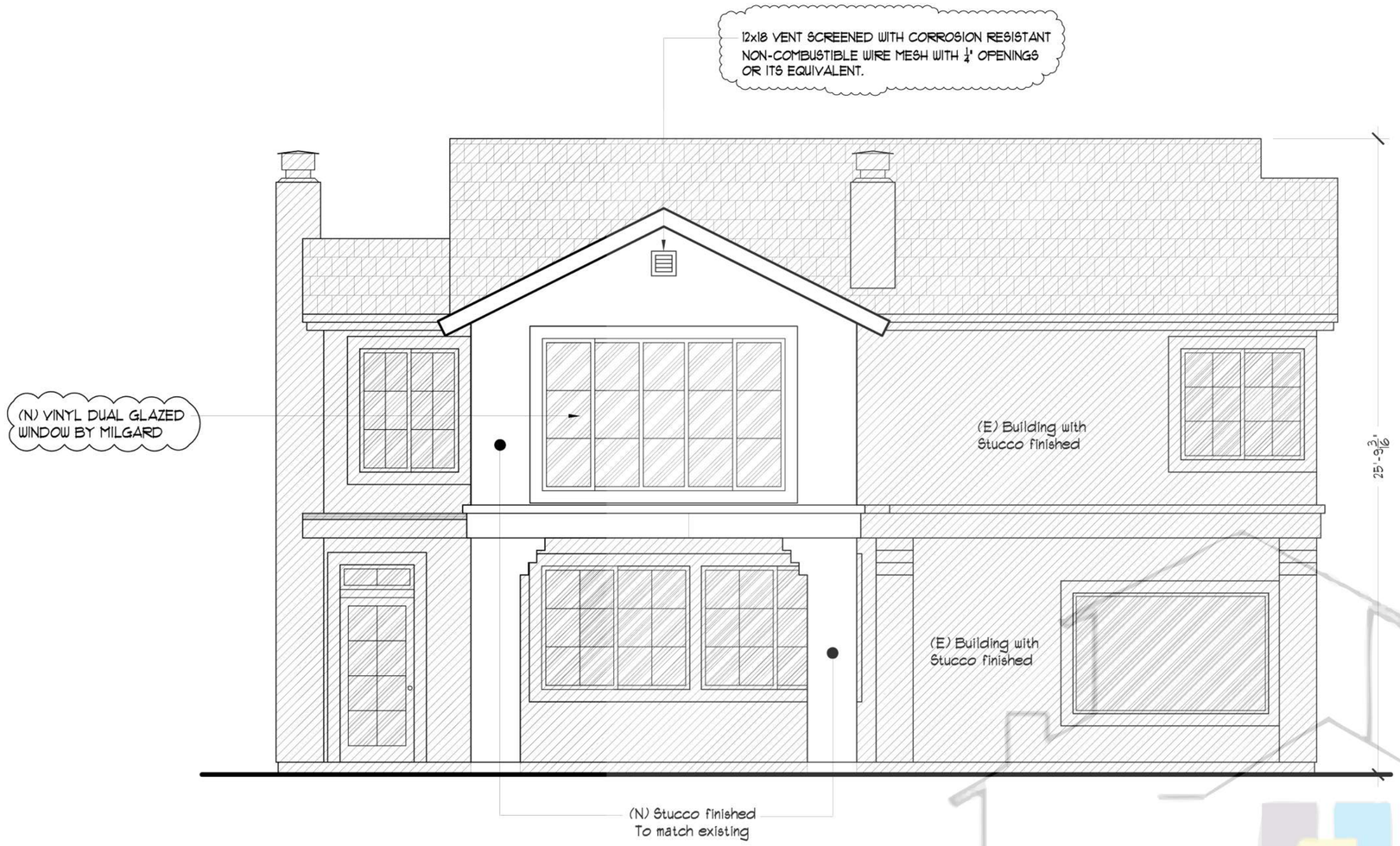

SOUTH (REAR) ELEVATION

SCALE: 1/4" = 1'

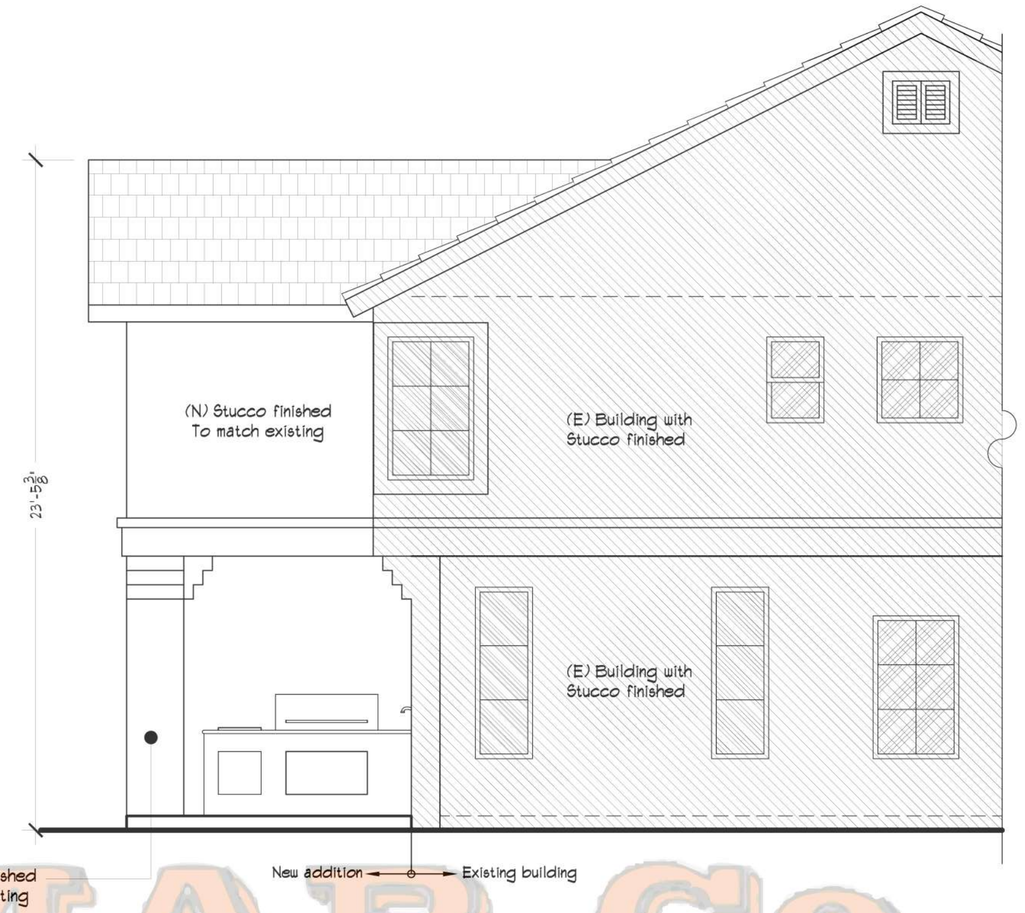

EAST (REARØ ELEVATION

SCALE: 1/4" = 1'

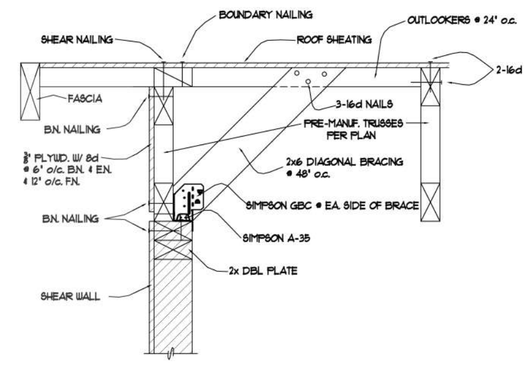

GABLE END TRUSS OVER SHEARWALL 1

2

MAR-CO
HOUSE PLANS AND DESIGNS

ATTIC VENT CALCULATION:

143/150 = Ø.95 SQ.FT. (REQUIRED)
1-12x12 VENT = 1.Ø SQ.FT. (PROVIDED)

FIRE RELATED NOTES:

1) FOR ROOF COVERINGS WHERE THE PROFILE ALLOWS A SPACE BETWEEN THE ROOF COVERING AND ROOF DECKING, THE SPACE SHALL BE SOLIDLY BLOCKED WITH NON- COMBUSTIBLE OR FIRE-RETARDANT MATERIALS. WHEN DRIP EDGE FLASHING IS USED AT THE FREE EDGES OF ROOFING MATERIALS, IT SHALL BE NON-COMBUSTIBLE.

2) EXTERIOR WALL OF STRUCTURES SHALL BE CONSTRUCTED WITH MATERIALS APPROVED FOR A MINIMUM OF 1-HOUR FIRE-RESISTANCE-RATED CONSTRUCTION ON THE EXTERIOR SIDE OR CONSTRUCTED WITH APPROVED NON-COMBUSTIBLE MATERIALS.

3) FIRE RESISTIVE WALL CONSTRUCTION SHALL EXTEND FROM THE TOP OF THE FOUNDATION TO THE UNDERSIDE OF THE PROTECTED EAVE OR TO THE UNDERSIDE OF ROOF SHEATING WHEN HEAVY TIMBER CONSTRUCTION IS USED AT EAVES.

4) EXTERIOR WINDOWS, WINDOW WALLS, GLAZED DOORS, AND WINDOWS WITHIN EXTERIOR DOORS SHALL BE TEMPERED GLASS, MULTILAYERED GLAZED PANELS, GLASS BLOCK OR HAVE A FIRE PROTECTION RATING OF NOT LESS THAN 20 MINUTES. GLAZING FRAMES MADE OF VINYL MATERIALS SHALL HAVE WELDED CORNERS, METAL REINFORCEMENT IN THE INTERLOCK AREA, AND BE CERTIFIED TO THE MOST CURRENT EDITION OF "ANSI/AAMA/NWWDA Ø1/I.52" STRUCTURAL REQUIREMENTS.

5) EAVES CONSTRUCTED WITH CONSTRUCTIVE MATERIALS SHALL BE PROTECTED. EAVES AND SOFFITS SHALL BE PROTECTED ON THE EXPOSED UNDERSIDE BY MATERIALS APPROVED FOR A MINIMUM OF 1-HOUR FIRE-RESISTIVE CONSTRUCTION.

6) INDIVIDUAL VENTILATION OPENINGS SHALL NOT EXCEED 144 SQUARE INCHES.

7) ALL VENTILATION OPENINGS SHALL BE COVERED WITH NON-COMBUSTIBLE CORROTION-RESISTANT MESH. MESH OPENINGS SHALL BE 1/4-INCH.

8) VENTILATION OPENINGS ON STRUCTURES LOCATED IMMEDIATELY ADJACENT TO BRUSH MANAGEMENT ZONE 1 SHALL NOT BE DIRECTED TOWARD HAZARDOUS AREAS OF NATIVE OR NATURALIZED VEGETATION.

9) ROOF VENTS, DORMER VENTS, GABLE VENTS, FOUNDATION VENTILATION OPENINGS, VENTILATION OPENINGS IN VERTICAL WALLS, OR OTHER SIMILAR VENTILATION OPENINGS SHALL BE LOUVERED AND COVERED WITH 1/4-INCH, NON-COMBUSTIBLE, CORROSION-RESISTANT METAL MESH, OR OTHER APPROVED MATERIAL THAT OFFERS EQUIVALENT PROTECTION. TURBINE ATTIC VENTS SHALL BE EQUIPPED TO ALLOW, ONE-WAY DIRECTION ROTATION ONLY; THEY SHALL NOT FREE SPIN IN BOTH DIRECTIONS.

1Ø) ATTIC VENTILATION SHALL NOT BE LOCATED IN SOFFITS, IN EAVE OVERHANGS, BETWEEN RAFTERS AT EAVES, OR IN OTHER OVERHANG AREAS.

11) ALL STRUCTURES HAVING ANY CHIMNEY, FLUE, OR STOVEPIPE ATTACHED TO ANY FIREPLACE, STOVE, BARBECUE, OR OTHER SOLID OR LIQUID FUEL BURNING EQUIPMENT AND DEVICES, SHALL BE EQUIPPED WITH APPROVED SPARK ARRESTER.

12) GLAZING MATERIALS USED IN SKYLIGHTS, ROOFS, AND SLOPED WALLS SHALL BE TEMPERED GLASS OR MULTILAYERED GLASS.

13) ALL ROOF GUTTERS AND DOWNSPOUTS SHALL BE CONSTRUCTED OF NON-COMBUSTIBLE MATERIAL.

14) GARAGE DOORS SHALL BE CONSTRUCTED OF NON-COMBUSTIBLE MATERIALS OR SHALL BE CONSTRUCTED OF WOOD MEMBERS NOT LESS THAN 1 1/2 INCHES NOMINAL THICKNESS.

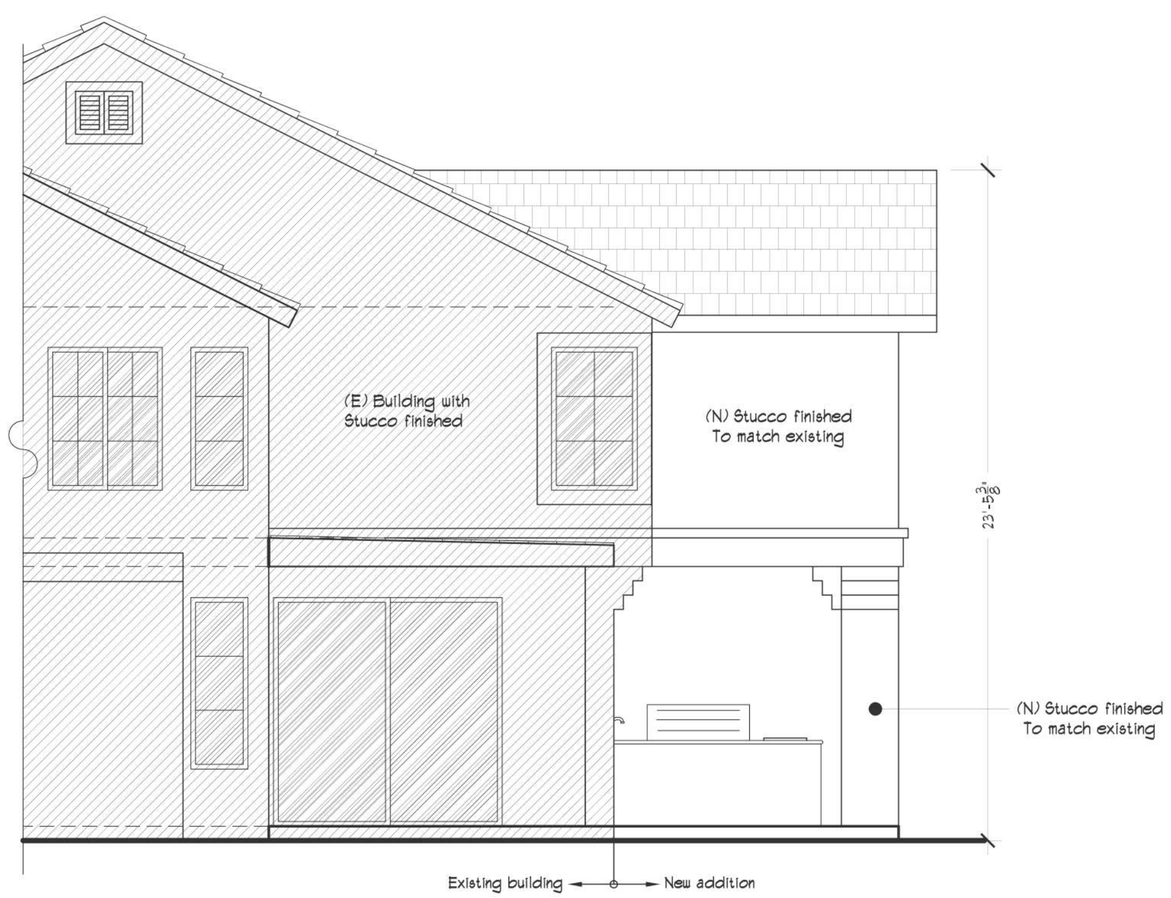

RIGHT (WEST) ELEVATION

SCALE: 1/4" = 1'

NOTES:

1.- THE CONTRACTOR SHALL TAKE NECESSARY PRECAUTIONS TO MAINTAIN AND ENSURE THE INTEGRITY OF THE EXISTING CONSTRUCTION BY IDENTIFYING LOCATION OF P.T. CABLES PRIOR TO DRILLING, SO AS NOT TO DAMAGE EXISTING CABLES/END CAPS.

2.- CONTRACTOR TO PROVIDE SHORING AS REQUIRED FOR SAFE PLACEMENT OF NEW BEAM

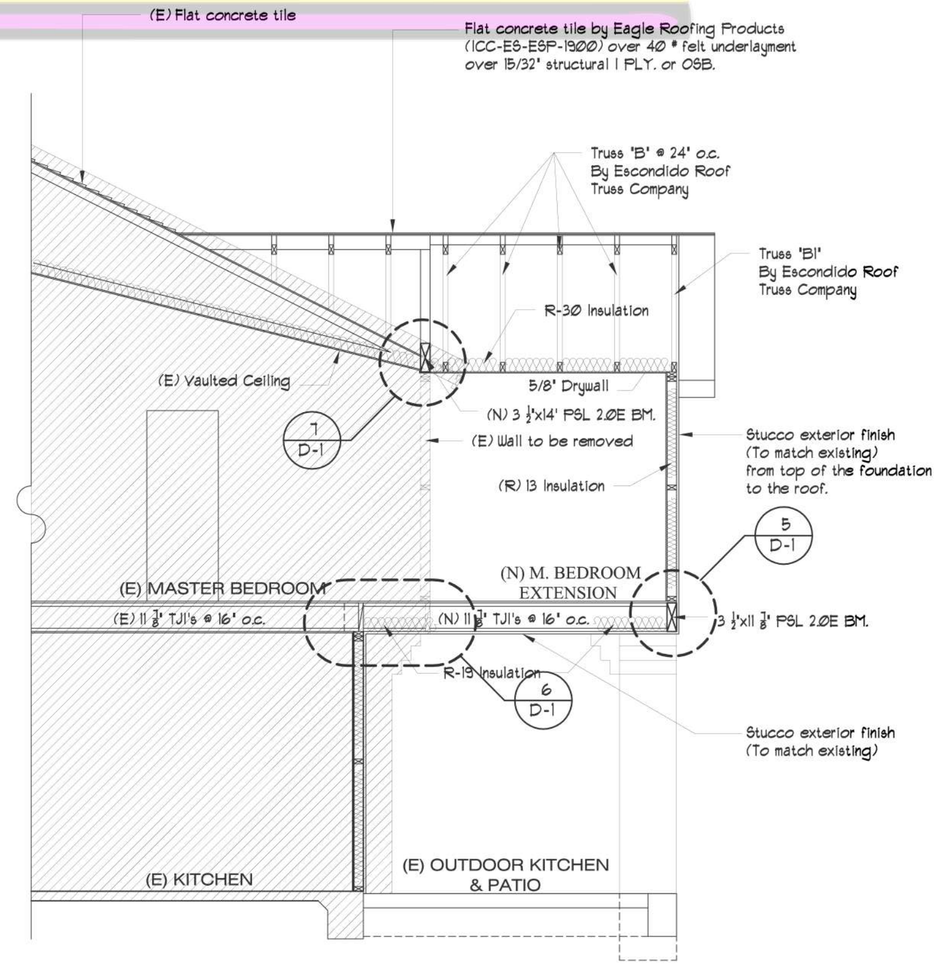

SECTION A

SCALE: 1/4" = 1'

MARCO'S HOUSE PLANS & DESIGN
Building permits
Room and patio additions
Architectural CAD drafting
Marco A. Laureano
760.805.2358
760.841.0370
LICENSE : 16964

DISEÑO DIBUJO Y CONSTRUCCION
Permisos para construccion
Ampliacion de cuartos y patios
Dibujo de planos arquitectonicos
Marco A. Laureano
760.805.2358
760.841.0370
LICENSE : 16964

OWNER:
MR. CHIDAN
XXXX RUETTE DE MER
SAN DIEGO, CA. 92130
HOME: 000-000-0000
CELL: 000-000-0000

PROJECT NAME:
CHIDAN'S ROOM ADDITION
XXXX RUETTE DE MER
SAN DIEGO, CA. 92130

CONSULTANT:

REVISIONS:
1 DECEMBER / 2008
2

DATE: OCTOBER / 2008
SCALE: AS SPECIFIED
PLANS DRAWN & PREPARED BY: MARCO A. LAUREANO
SHEET: A-2
OF SHEET: 7