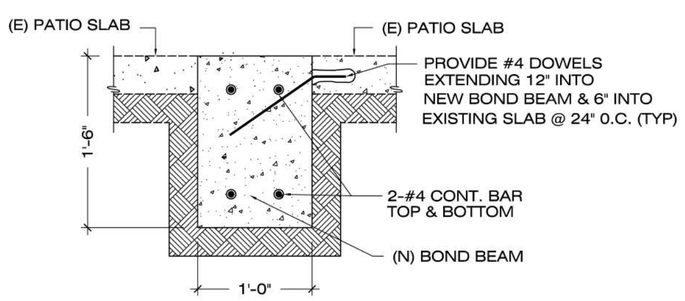

BOND BEAM DETAIL 1

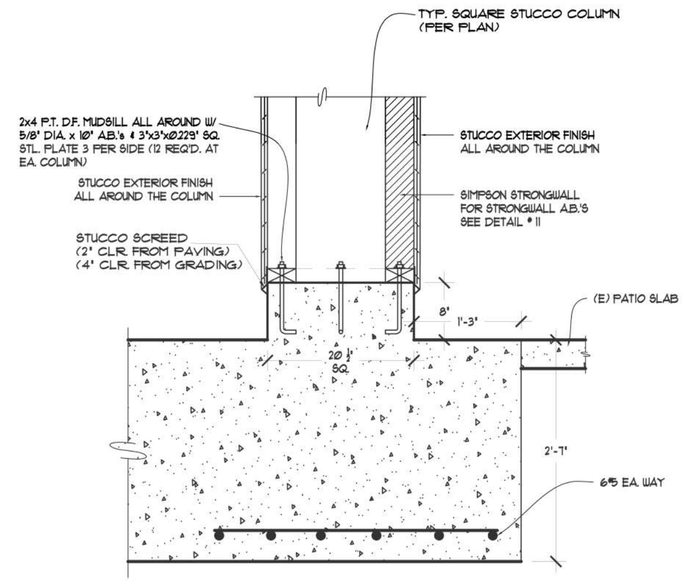

COLUMN FOOTING DETAIL 2

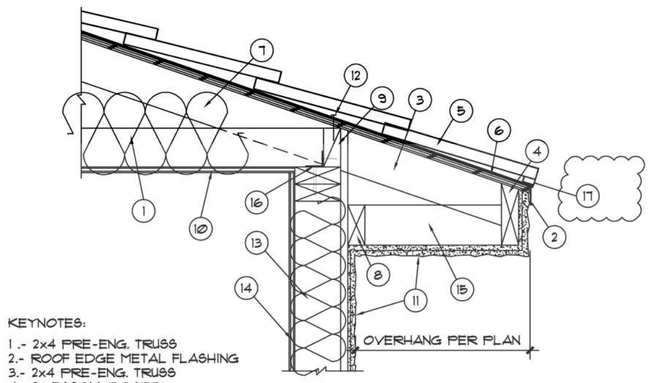

KEYNOTES:

1.- 2x4 PRE-ENG. TRUSS
2.- ROOF EDGE METAL FLASHING
3.- 2x4 PRE-ENG. TRUSS
4.- 2x FASCIA BOARD
5.- FLAT CONCRETE TILE BY EAGLE ROOFING PRODUCTS (ICC-ES-ESR-1580D) OVER 40# FELT UNDERLYMENT
6.- 19/32 STRUCTURAL 1 PLY. or OSB.
7.- R-30 ROOF INSULATION
8.- 2x LEDGER
9.- 2x BLOCKING
10.- 5/8" GYPSUM WALLBOARD
11.- 7/8" EXTERIOR STUCCO FINISHED
12.- BN @ 6' o.c. MAX. TO EAVE BLOCKS.
13.- R-13 BATT INSULATION
14.- 1/2" GYPSUM WALLBOARD
15.- 2x FRAMING @ 24" o/c. MAX.
16.- SIMPSON A-35 @ 24" o.c.
17.- FIRESTOP W/APPROVED MATERIAL or 1 LAYER OF No. 72 ASTM. CAP SHEET INSTALLED OVER COMBUSTIBLE DECKING

EAVE DETAIL (ENHANCED) 3

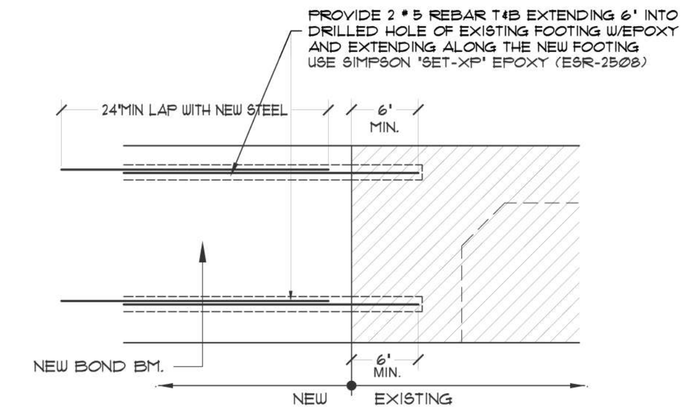

NOTES:

1- NO SPECIAL INSPECTION REQUIRED
2- THE CONTRACTOR SHALL TAKE NECESARY PRECAUTIONS TO MAINTAIN AND ENSURE THE INTEGRITY OF THE (E) CONSTRUCTION BY IDENTIFYING LOCATION OF P.T. CABLES PRIOR TO DRILLING, SO AS NOT TO DAMAGE (E) CABLES/END CAPS

TIE-IN (N) BOND BEAM WITH (E) FOOTING 4

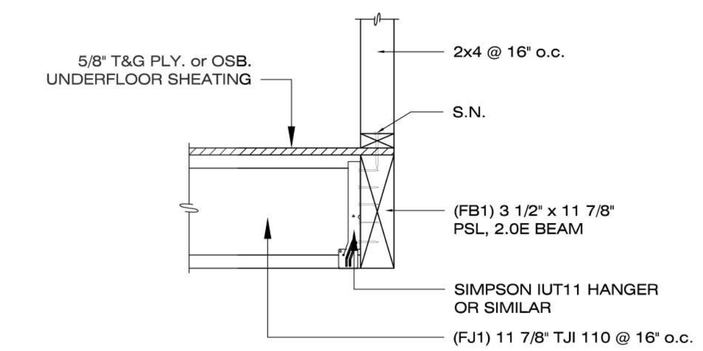

TGI & BEAM CONNECTION DETAIL 5

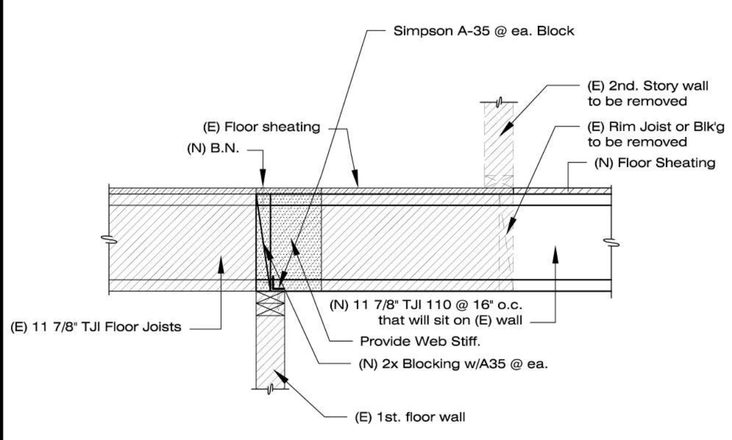

TJI FLOOR JOISTS DETAIL 6

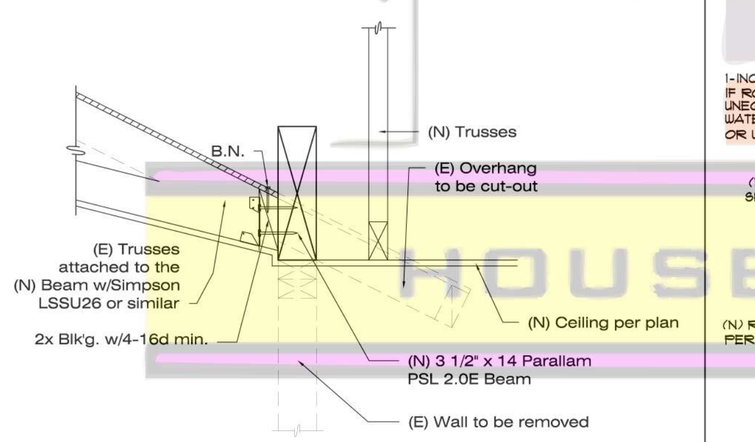

NEW ROOF BEAM DETAIL 7

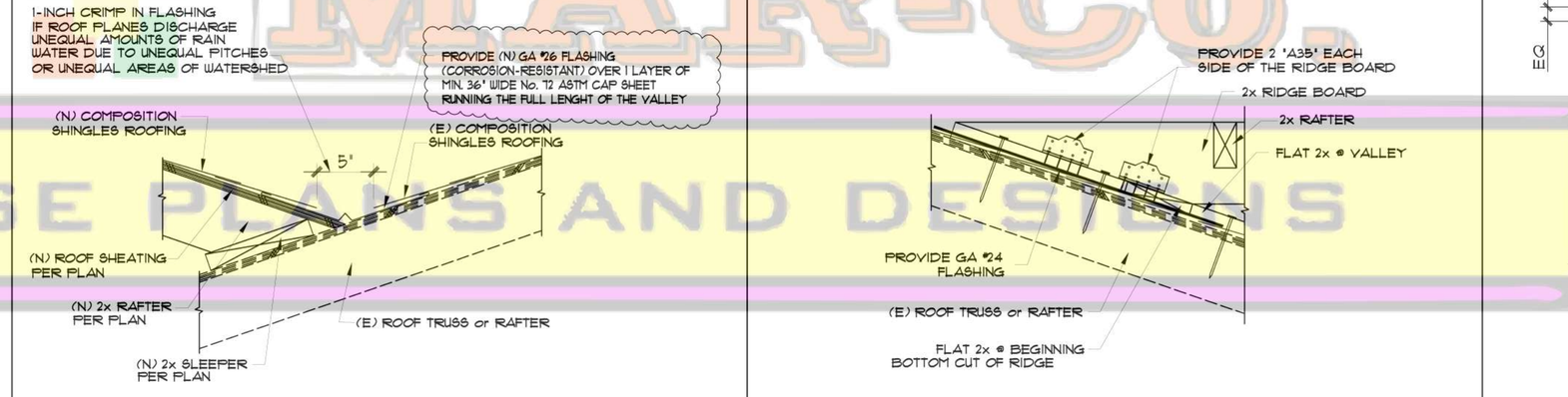

VALLEY DETAIL 8

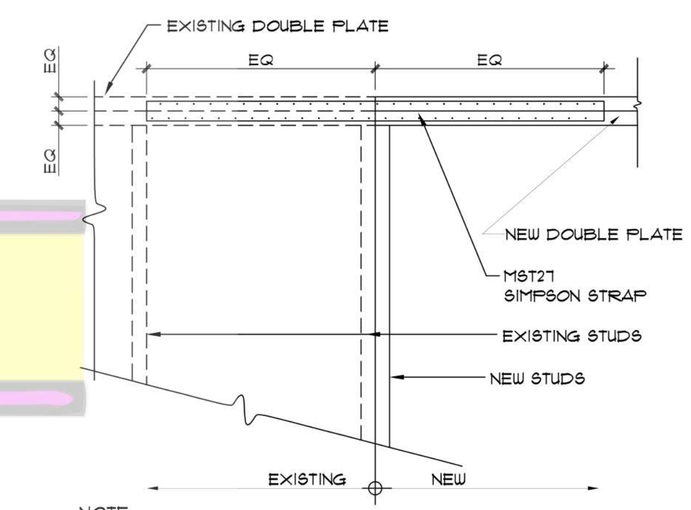

NOTE:
PLACE NAILS STARTING @ CENTER OF STRAP & WORK OUT TO EACH END.

SLEEPER DETAIL 9

MST27 STRAP DETAIL 10

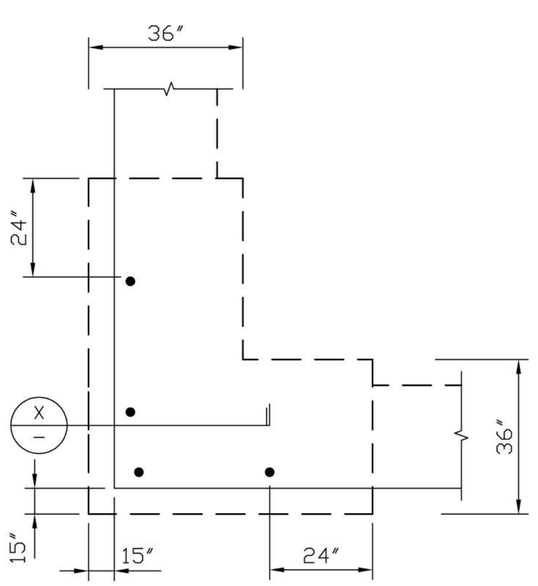

NOTE: ALSO SEE SSW1 & SSW2 DRAWINGS

FOOTING PLAN AT CORNER
N.T.S.

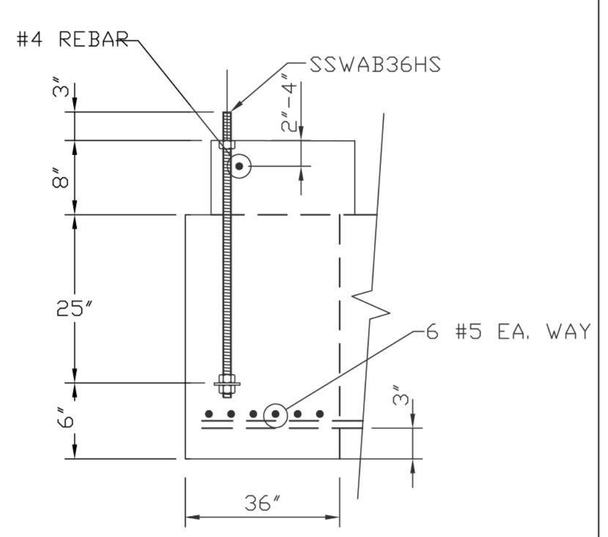

SECTION "X"
N.T.S.

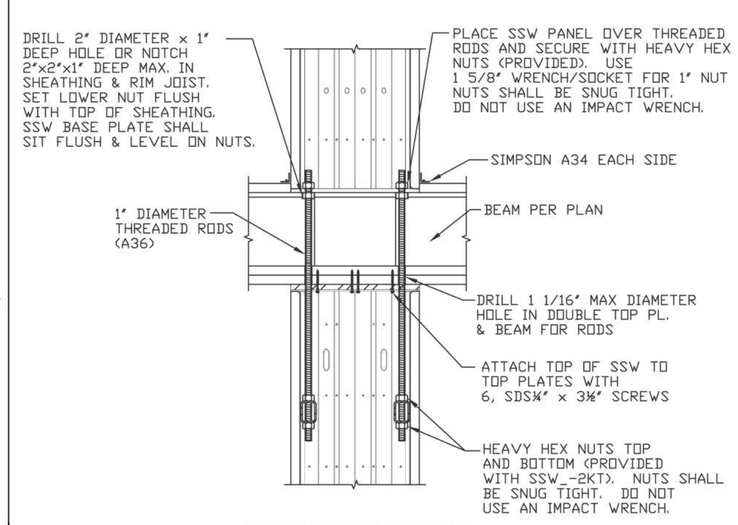

INTERIOR ELEVATION
N.T.S.

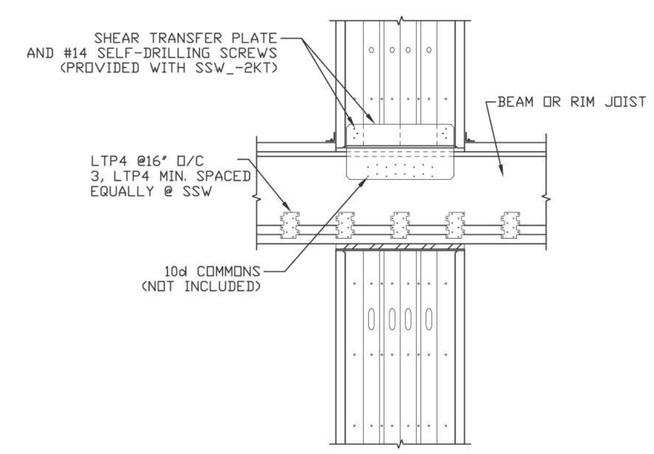

EXTERIOR ELEVATION
N.T.S.

NOTE: ALSO SEE SSW1 & SSW2 DRAWINGS

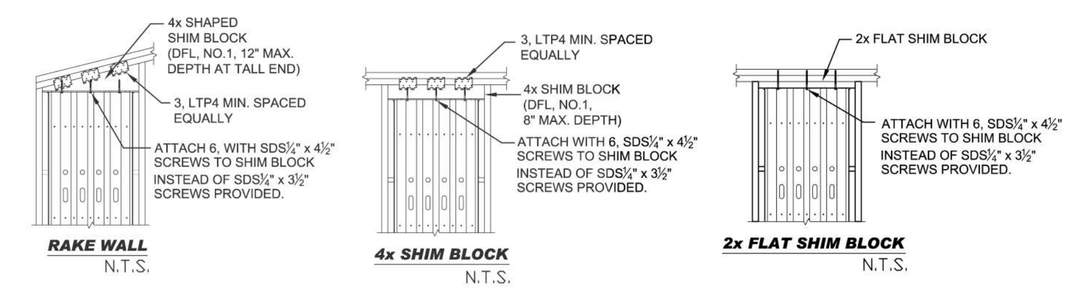

RAKE WALL
N.T.S.

4x SHIM BLOCK
N.T.S.

2x FLAT SHIM BLOCK
N.T.S.

NOTE: ALSO SEE SSW1 & SSW2 DRAWINGS

STEEL STRONG-WALL FOOTING DETAIL 11

STEEL STRONG-WALL CONNECTION DETAILS 12

MAR-Co. HOUSE PLANS AND DESIGNS

MARCO'S HOUSE PLANS & DESIGN
Architectural CAD drafting
Building permits
Room and patio additions
Marco A. Laureano
LICENSE : 16964
760.805.2358
760.841.0370

DISEÑO DIBUJO Y CONSTRUCCION
Dibujo de planos arquitectonicos
Permisos para construccion
Ampliacion de cuartos y patios
Marco A. Laureano
LICENSE : 16964
760.805.2358
760.841.0370

OWNER'S NAME & ADDRESS:
MR. CHIDAN
XXXX RUETTE DE MER
SAN DIEGO, CA. 92130
HOME: 000-000-0000
CELL: 000-000-0000

PROJECT NAME & ADDRESS:
CHIDAN'S ROOM ADDITION
XXXX RUETTE DE MER
SAN DIEGO, CA. 92130

CONSULTANT:

REVISIONS:
1 DECEMBER / 2008
2

DATE: OCTOBER / 2008
SCALE: AS SPECIFIED
PLANS DRAWN & PREPARED BY: MARCO A. LAUREANO
SHEET: D-1
OF SHEETS: 7