SSTB ANCHOR BOLTS ARE NOT CURRENTLY CODE LISTED. SEE DETAILS 10-SWP AND 11-SWP FOR SWAB7/8 CODE LISTED ANCHORAGE SOLUTIONS. REFER TO THE CURRENT SIMPSON CONNECTOR CATALOG FOR SSTB INSTALLATION AND REBAR LENGTH REQUIREMENTS.

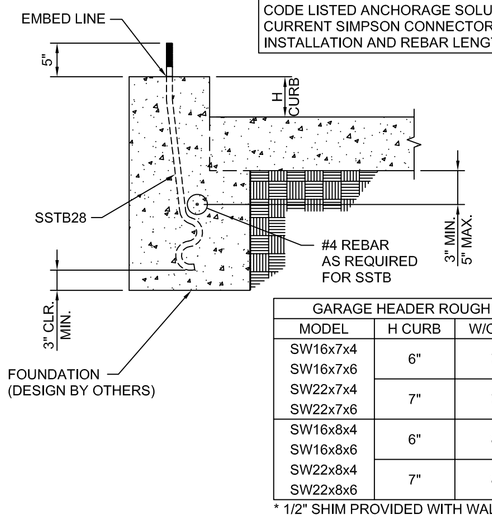

GARAGE HEADER ROUGH OPENING HEIGHT			
MODEL	H CURB	W/O SHIM*	WITH SHIM*
SW16x7x4	6"	7'-0"	7'-0 1/2"
SW16x7x6			
SW22x7x4	7"	7'-1"	7'-1 1/2"
SW22x7x6			
SW16x8x4	6"	8'-0"	8'-0 1/2"
SW16x8x6			
SW22x8x4	7"	8'-1"	8'-1 1/2"
SW22x8x6			

* 1/2" SHIM PROVIDED WITH WALL

SSTB ANCHORAGE 1

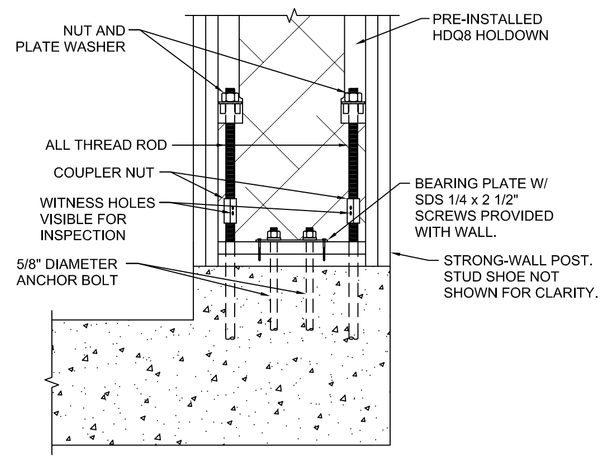

PORTAL WALL SILL 2

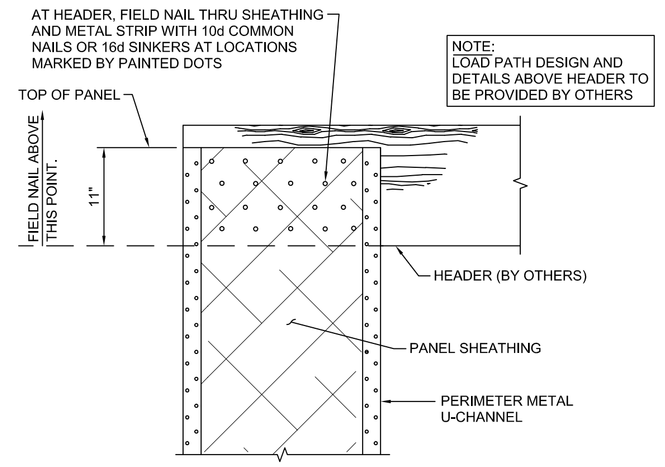

NOTE:
LOAD PATH DESIGN AND DETAILS ABOVE HEADER TO BE PROVIDED BY OTHERS

TOP OF WALL CONNECTION 3

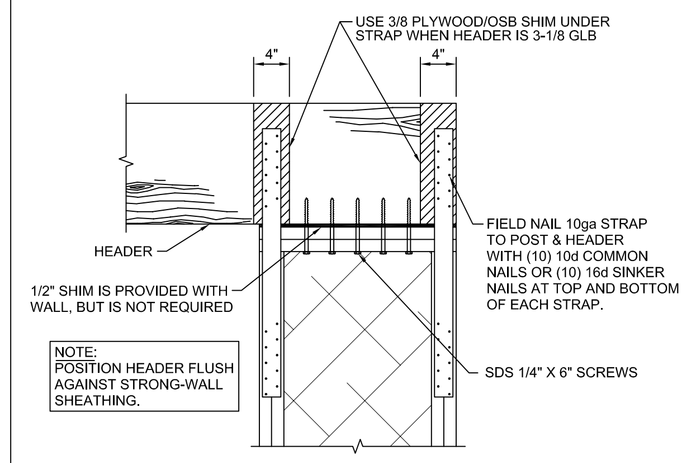

NOTE:
POSITION HEADER FLUSH AGAINST STRONG-WALL SHEATHING.

TOP OF WALL CONNECTION 4

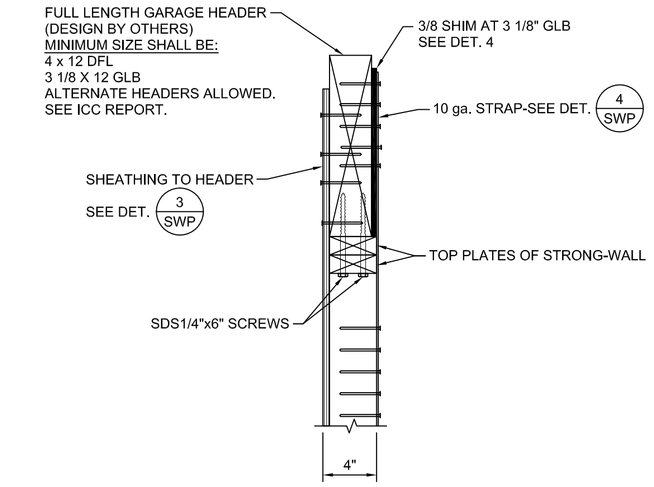

4" PORTAL WALL SECTION 5

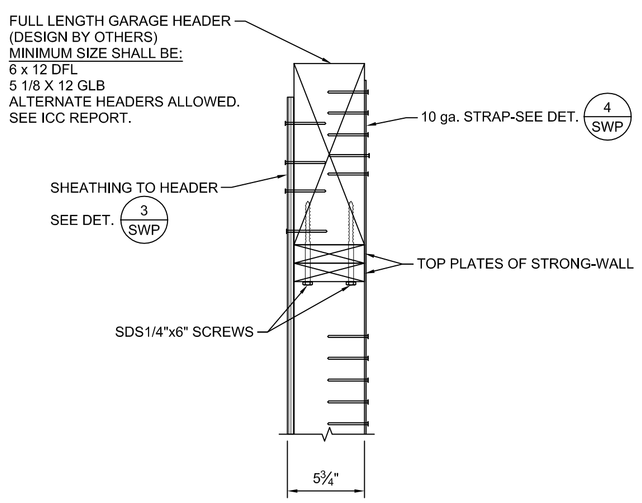

5.75" PORTAL WALL SECTION 6

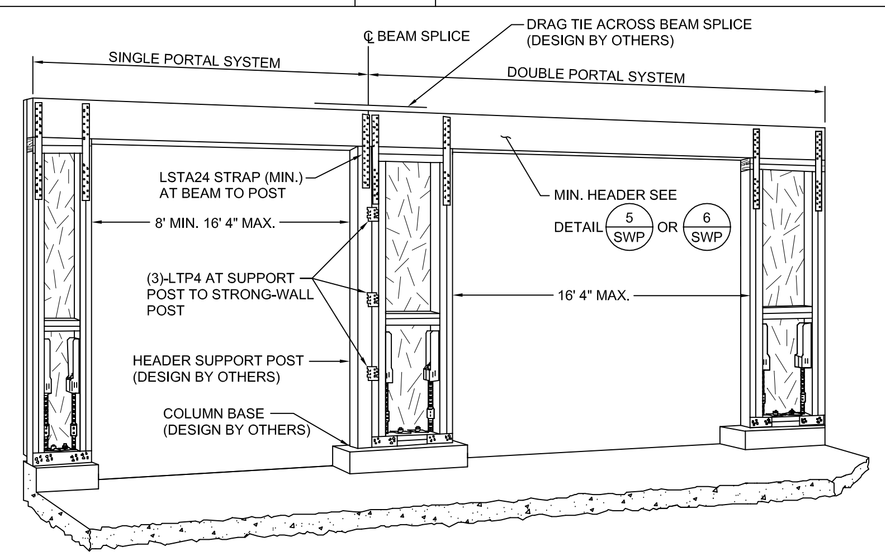

SINGLE & DOUBLE PORTAL ASSEMBLY 7

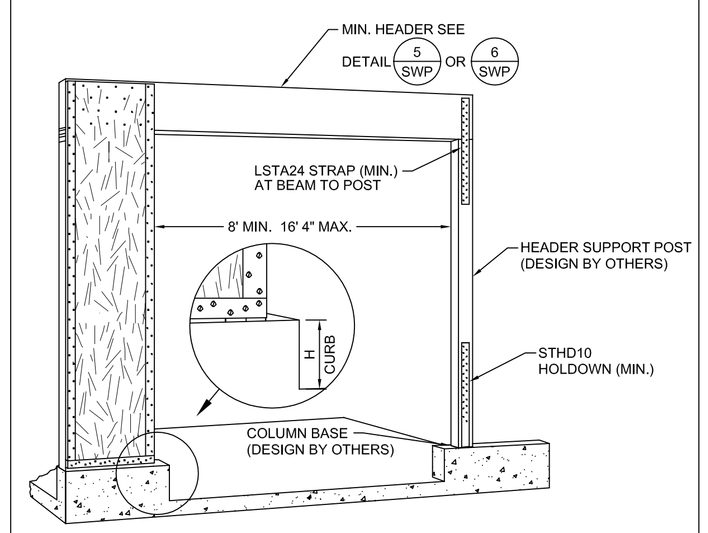

SINGLE PORTAL ASSEMBLY 8

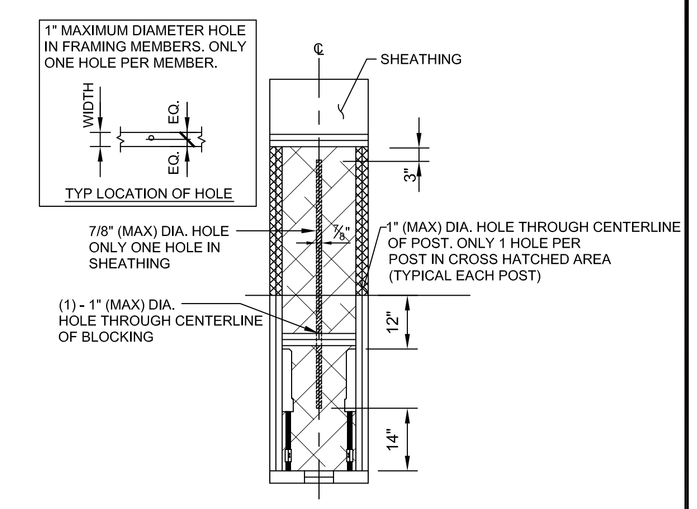

16" & 22" PORTAL WALL OPENINGS 9

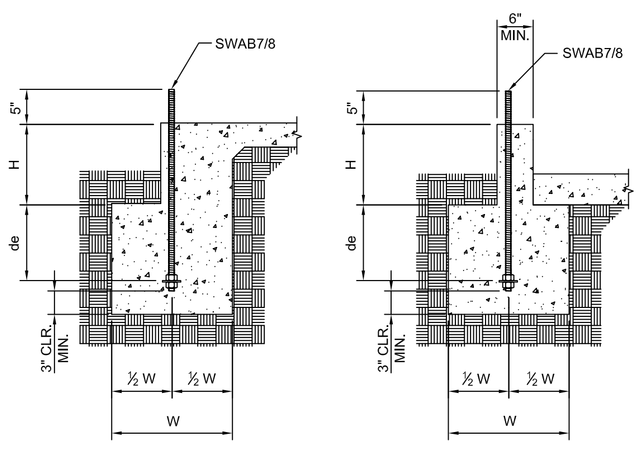

H = 13 ½" MAXIMUM WITH SWAB7/8x30 ANCHOR BOLT WHEN de = 10"
H = 19 ½" MAXIMUM WITH SWAB7/8x36 ANCHOR BOLT WHEN de = 10"

SLAB ON GRADE FOUNDATION **CURB OR STEMWALL FOUNDATION**

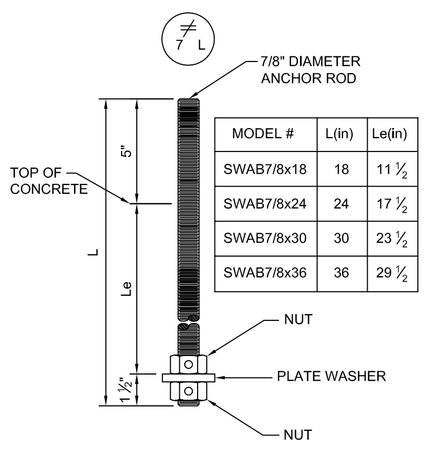

MODEL #	L(in)	Le(in)
SWAB7/8x18	18	11 ½
SWAB7/8x24	24	17 ½
SWAB7/8x30	30	23 ½
SWAB7/8x36	36	29 ½

SWAB7/8 ANCHOR BOLT

NOTES:
1. SEE 11-SWP FOR DIMENSIONS AND ADDITIONAL NOTES.

ANCHORAGE - TYPICAL SECTIONS 10

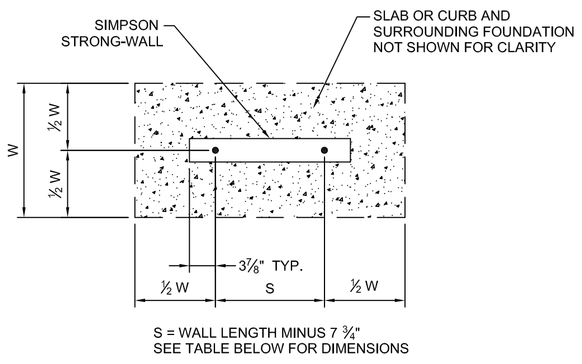

S = WALL LENGTH MINUS 7 ¾"
SEE TABLE BELOW FOR DIMENSIONS

FOUNDATION PLAN VIEW

FOUNDATION DIMENSIONS FOR STRONG-WALL ANCHORAGE				
	CONDITION	ASD ALLOWABLE UPLIFT (lbs)	W (in)	de (in)
SEISMIC	CRACKED	13,000	29	10
	UNCRACKED	13,000	21	7
WIND	CRACKED	6,500	16	6
		9,700	21	7
		12,600	25	9
	UNCRACKED	6,600	14	6
		9,600	18	6
		13,000	22	8

NOTES:
1. ANCHORAGE DESIGNS CONFORM TO ACI 318 APPENDIX D AND ASSUME MINIMUM f'c=2,500 PSI CONCRETE. ASTM A307 OR ASTM F1554, GRADE 36 ANCHOR RODS AND NO SUPPLEMENTARY REINFORCEMENT. HIGH STRENGTH ANCHORAGE DESIGN BY OTHERS WHEN REQUIRED.
2. SEISMIC INDICATES SEISMIC DESIGN CATEGORY C THROUGH F. DETACHED 1 AND 2 FAMILY DWELLINGS IN SDC C MAY USE WIND ANCHORAGE SOLUTIONS. SEISMIC ANCHORAGE DESIGNS CONFORM TO ACI 318-05 SECTION D.3.3.4.
3. WIND INCLUDES SEISMIC DESIGN CATEGORY A AND B.
4. FOUNDATION DIMENSIONS ARE FOR ANCHORAGE ONLY. FOUNDATION DESIGN (SIZE AND REINFORCEMENT) BY OTHERS. THE REGISTERED DESIGN PROFESSIONAL MAY SPECIFY ALTERNATE EMBEDMENT, FOOTING SIZE OR ANCHOR BOLT.

ANCHORAGE SCHEDULE 11

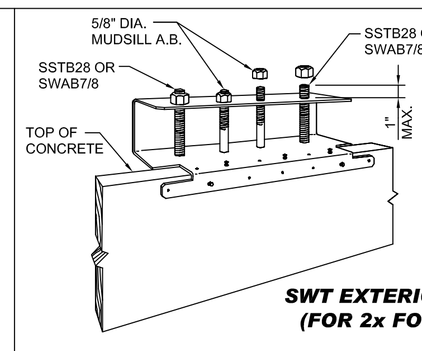

SSTB ANCHOR BOLTS ARE NOT CURRENTLY CODE LISTED. SEE DETAILS 1-SW1 AND 2-SW1 FOR SWAB7/8 CODE LISTED ANCHORAGE SOLUTIONS. REFER TO THE CURRENT SIMPSON C-SW CATALOG FOR TEMPLATE SELECTION CHART.

SWT EXTERIOR TEMPLATE (FOR 2x FORM BOARDS)

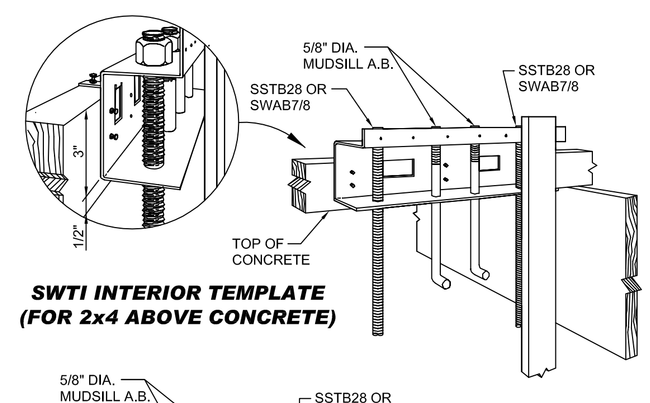

SWTI INTERIOR TEMPLATE (FOR 2x4 ABOVE CONCRETE)

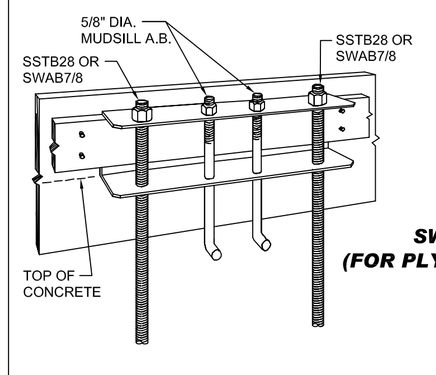

SWTPF TEMPLATE (FOR PLYWOOD PANEL FORMS)

SEE SHEET SW2 FOR STACKED STRONG-WALL ANCHOR BOLT REQUIREMENTS.

STRONG-WALL® TEMPLATES 12

NOTE:
ALL NECESSARY HARDWARE, FOR PANEL INSTALLATION, IS PRE-ATTACHED OR PROVIDED, EXCEPT FOR TEMPLATE AND ANCHOR BOLTS.

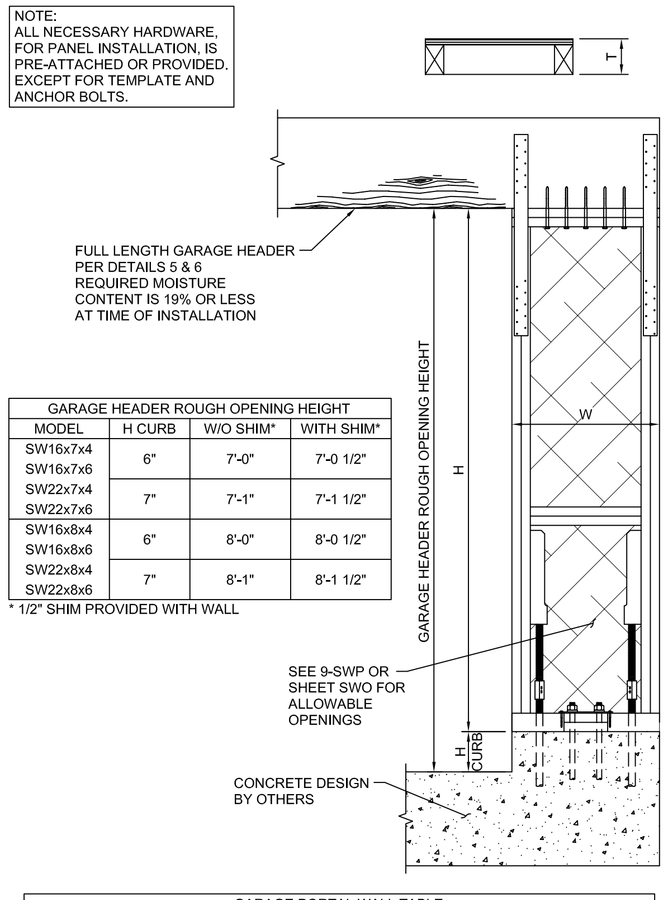

GARAGE HEADER ROUGH OPENING HEIGHT			
MODEL	H CURB	W/O SHIM*	WITH SHIM*
SW16x7x4	6"	7'-0"	7'-0 1/2"
SW16x7x6			
SW22x7x4	7"	7'-1"	7'-1 1/2"
SW22x7x6			
SW16x8x4	6"	8'-0"	8'-0 1/2"
SW16x8x6			
SW22x8x4	7"	8'-1"	8'-1 1/2"
SW22x8x6			

* 1/2" SHIM PROVIDED WITH WALL

GARAGE PORTAL WALL TABLE							
MODEL SET UP	W (IN)	H (IN)	T (IN)	NUMBER OF FASTENERS IN BOTTOM OF WALL	NUMBER OF MUDSILL ANCHORS	HOLDOWN ANCHOR BOLTS	ASSEMBLED WALL WEIGHT (lbs)
SW16x7x4	16	78	4	8-SDS 1/4x6	2-5/8"Ø	2-7/8"Ø	90
SW16x7x6	16	78	5 3/4	8-SDS 1/4x6	2-5/8"Ø	2-7/8"Ø	112
SW16x8x4	16	90	4	8-SDS 1/4x6	2-5/8"Ø	2-7/8"Ø	95
SW16x8x6	16	90	5 3/4	8-SDS 1/4x6	3-5/8"Ø	2-7/8"Ø	120
SW22x7x4	22	78	4	10-SDS 1/4x6	2-5/8"Ø	2-7/8"Ø	95
SW22x7x6	22	78	5 3/4	10-SDS 1/4x6	2-5/8"Ø	2-7/8"Ø	117
SW22x8x4	22	90	4	10-SDS 1/4x6	2-5/8"Ø	2-7/8"Ø	105
SW22x8x6	22	90	5 3/4	10-SDS 1/4x6	2-5/8"Ø	2-7/8"Ø	130

PORTAL WALL SPECIFICATIONS 13

1. STRONG-WALL® SHEARWALL IS MANUFACTURED AND TRADEMARKED BY "SIMPSON STRONG-TIE COMPANY INC.", HOME OFFICE: 5956 W. LAS POSITAS BOULEVARD, PLEASANTON, CA. 94588 TEL: (800) 999-5099, FAX: (925) 875-0826 "SIMPSON STRONG-TIE COMPANY INC." IS AN ISO 9001 REGISTERED COMPANY.
2. INSTALLATION OF PRODUCT SHALL BE DONE IN STRICT CONFORMANCE TO THESE DRAWINGS AND THE STRONG-WALL® INSTALLATION GUIDE. MODIFICATIONS TO THIS PRODUCT AND ASSOCIATED SYSTEMS OR CHANGES IN THE INSTALLATION METHODS SHOWN ON THESE DRAWINGS AND THE INSTALLATION GUIDE SHOULD ONLY BE MADE BY A QUALIFIED ARCHITECT, CIVIL, OR STRUCTURAL ENGINEER. THE PERFORMANCE OF SUCH MODIFIED PRODUCTS OR ALTERED INSTALLATION PROCEDURES IS THE SOLE RESPONSIBILITY OF THE DESIGNER. REFER TO ICC-ES ESR-1267 FOR FURTHER INFORMATION.
3. THE CONTRACTOR SHALL VERIFY ALL DIMENSIONS, CONDITIONS, ELEVATIONS, ETC. PRIOR TO INSTALLATION OF ANY COMPONENTS FOR THE STRONG-WALL® SYSTEM. IF ANY DISCREPANCIES ARE FOUND, THEY SHALL BE BROUGHT TO THE ATTENTION OF THE PROJECT ARCHITECT, PROJECT ENGINEER OR BUILDING DESIGNER FOR CLARIFICATION PRIOR TO CONSTRUCTION.
4. THE CONTRACTOR SHALL VERIFY THE POSITION OF THE STRONG-WALL IN RELATION TO THE REST OF THE BUILDING SYSTEM AS SHOWN ON THE PROJECT DRAWINGS.
5. USE OF THIS PRODUCT IS SUBJECT TO THE APPROVAL OF THE LOCAL BUILDING OFFICIAL.
6. THE BUILDING STRUCTURE SHALL BE DESIGNED IN ACCORDANCE WITH THE LATEST ADOPTED VERSION OF THE BUILDING CODE AND ANY OTHER LOCAL, STATE OR FEDERAL REQUIREMENTS THAT MAY APPLY. VERIFY DESIGN REQUIREMENTS WITH THE LOCAL BUILDING DEPARTMENT.
7. THIS PRODUCT IS PART OF THE OVERALL LATERAL FORCE RESISTING SYSTEM OF THE STRUCTURE. DESIGN OF THE BUILDING'S LATERAL FORCE RESISTING SYSTEM, INCLUDING A COMPLETE LOAD PATH NECESSARY TO TRANSFER LATERAL FORCES FROM THE STRUCTURE TO THE GROUND, IS THE RESPONSIBILITY OF THE DESIGNER.
8. SIMPSON STRONG-TIE COMPANY INC. RESERVES THE RIGHT TO CHANGE SPECIFICATIONS, DESIGNS AND MODELS WITHOUT NOTICE OR LIABILITY FOR SUCH CHANGES.
9. ALL HARDWARE CALLED OUT IS SIMPSON STRONG-TIE.®

NOTES 14

REVISIONS		
NO.	DATE	
1	07/01/03	LINETYPES REVISED
2	05/04/07	GENERAL REVISIONS
3	09/23/07	GENERAL REVISIONS
4	08/29/08	ESR-1267 REVISIONS

SIMPSON STRONG-TIE COMPANY INC.
HOME OFFICE:
5956 W. LAS POSITAS BLVD., PLEASANTON, CA 94588
Tel: (800) 999-5099 Fax: (925) 875-0826

SIMPSON Strong-Tie® THERE IS NO EQUAL

STRONG-WALL® PORTAL WALLS

SIMPSON Strong-Tie® THERE IS NO EQUAL

NAME
DATE 8-29-2008
SCALE N.T.S.
CHECKED
SHEET **SWP**
OF SHEETS
JOB NO.